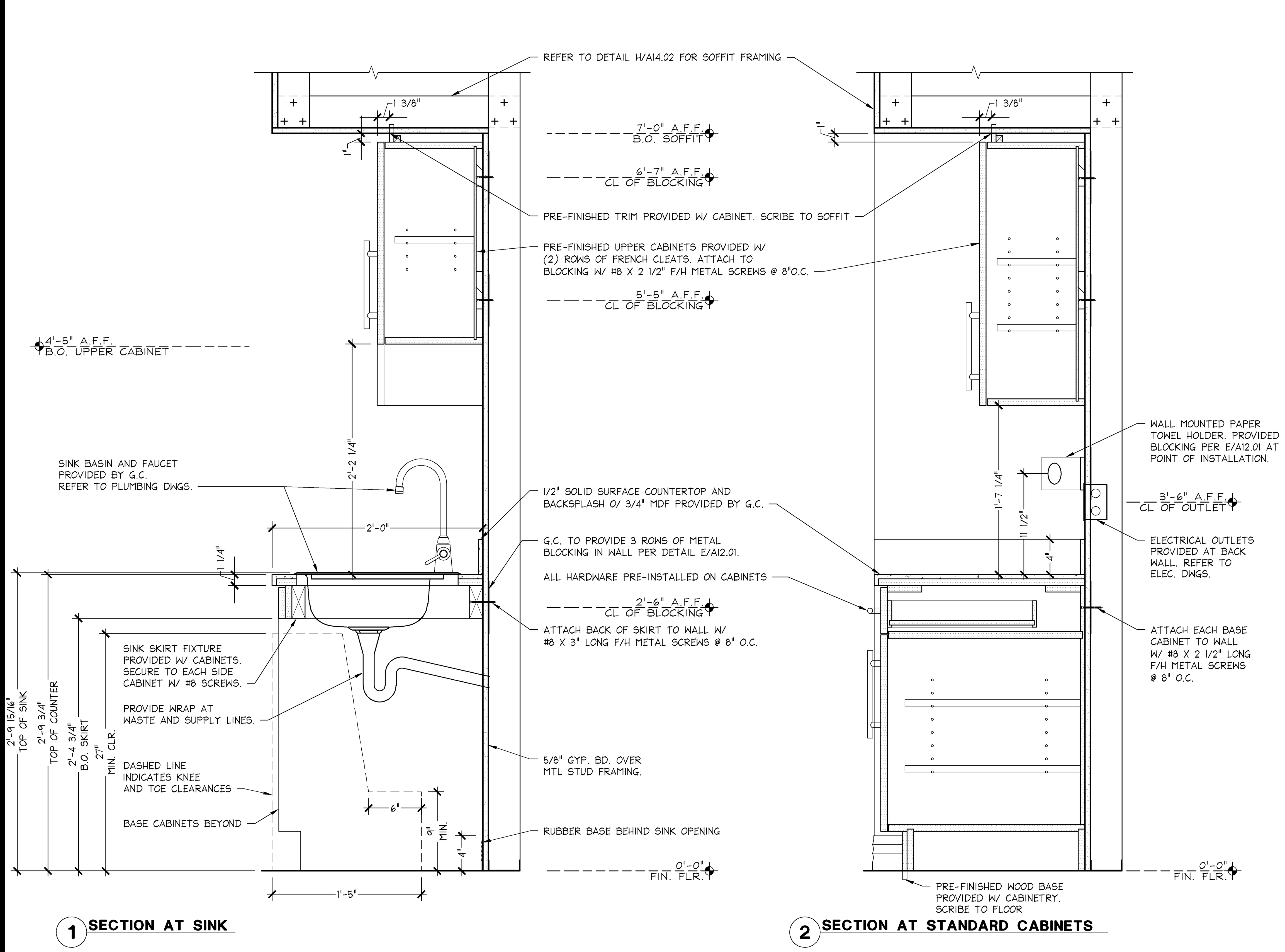

BREAK ROOM CABINET SECTION | 1 1/2" = 1'-0" | 05D-A1402-L00-DETL | L | 01.16.14

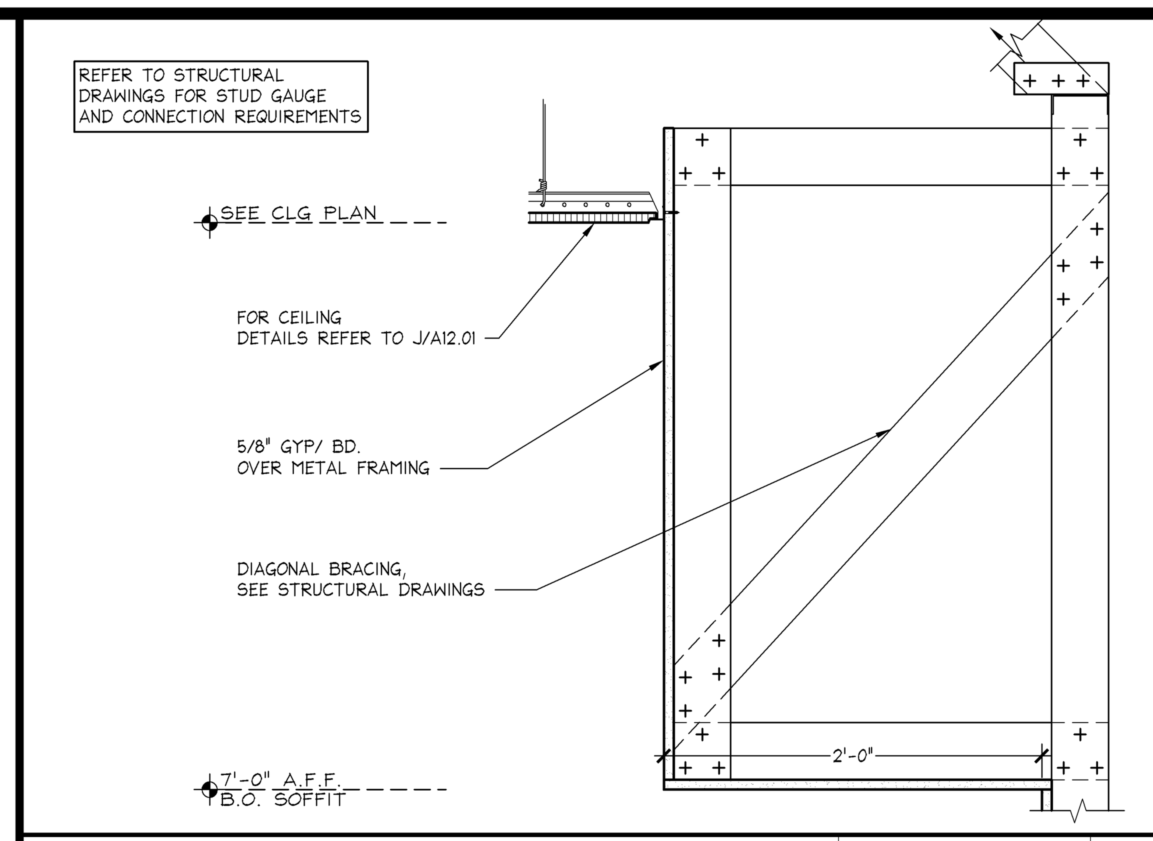

BREAK ROOM SOFFIT | 1 1/2" = 1'-0" | 05D-A1402-H00-DETL | H | 09.09.13

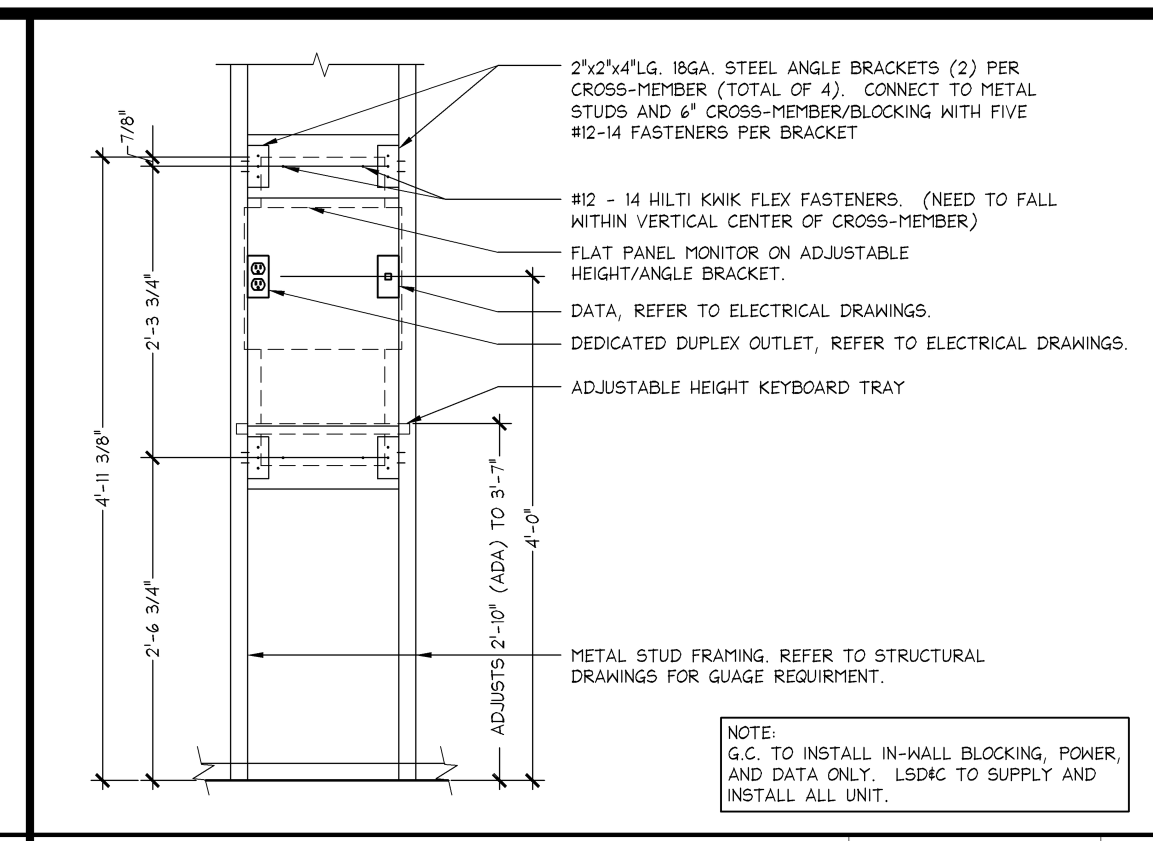

NOTE:
G.C. TO INSTALL IN-WALL BLOCKING, POWER, AND DATA ONLY. LSD&C TO SUPPLY AND INSTALL ALL UNIT.

ALL UNIT MOUNTING DETAIL | 1" = 1'-0" | 05D-A1402-D00-DETL | D | 05.23.13

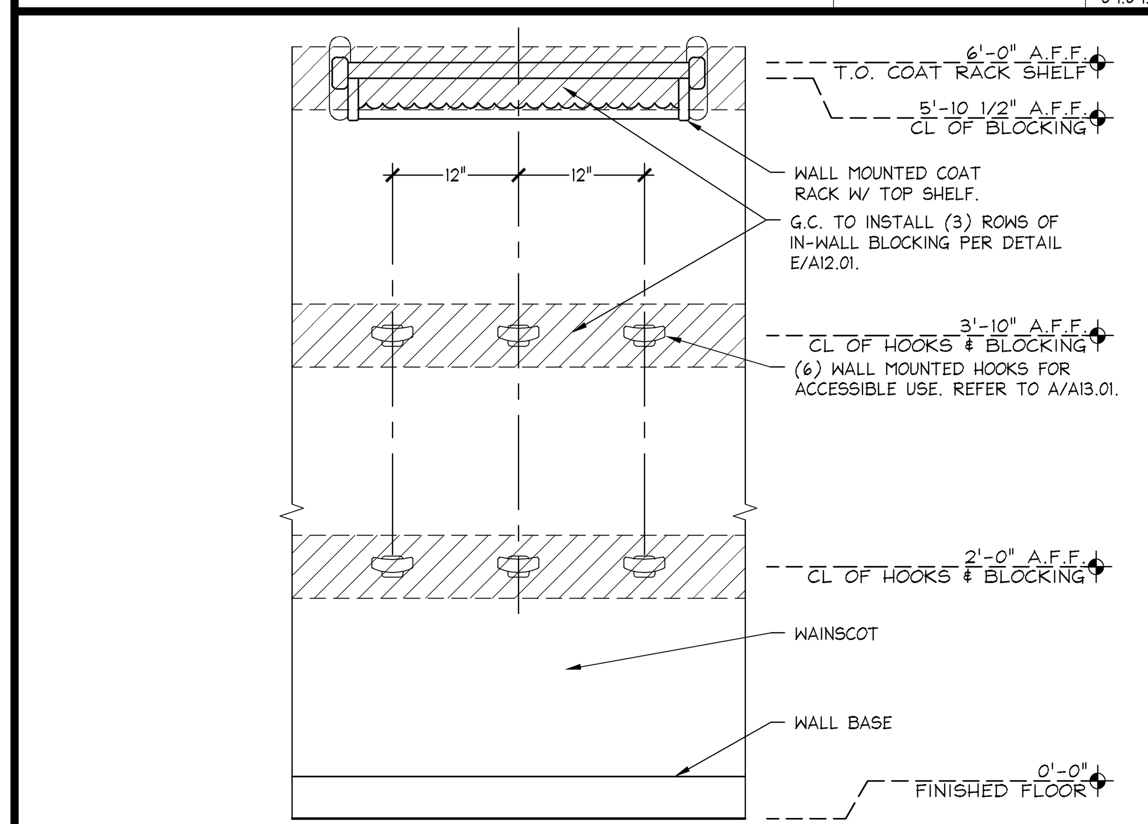

COAT RACK MOUNTING DETAIL | 1" = 1'-0" | 05D-A1402-G00-DETL | G | 08.09.13

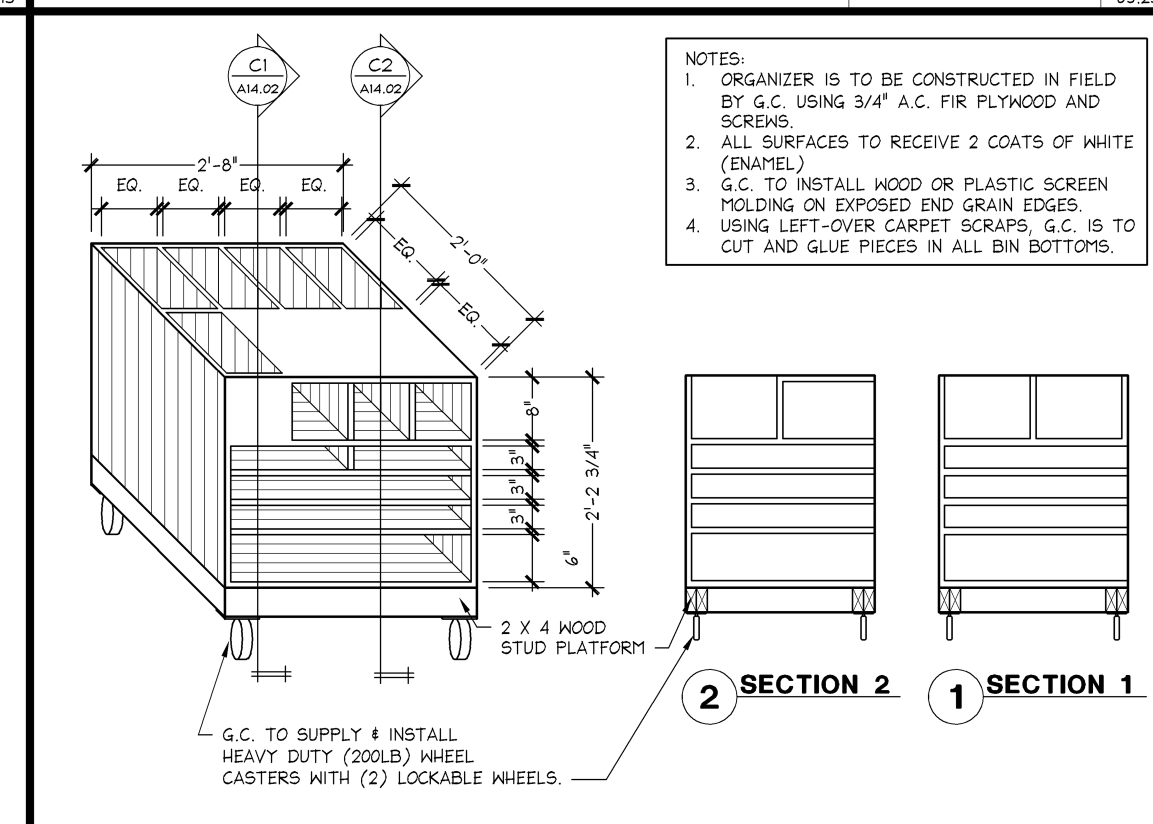

NOTES:
1. ORGANIZER IS TO BE CONSTRUCTED IN FIELD BY G.C. USING 3/4" A.C. FIR PLYWOOD AND SCREWS.
2. ALL SURFACES TO RECEIVE 2 COATS OF WHITE (ENAMEL)
3. G.C. TO INSTALL WOOD OR PLASTIC SCREEN MOLDING ON EXPOSED END GRAIN EDGES.
4. USING LEFT-OVER CARPET SCRAPS, G.C. IS TO CUT AND GLUE PIECES IN ALL BIN BOTTOMS.

MARKETING STORAGE BIN - PINK | 3/4" = 1'-0" | 05D-A1402-C00-DETL | C | 09.09.13

INSTALL ALL COMPONENTS PER MFG INSTRUCTIONS

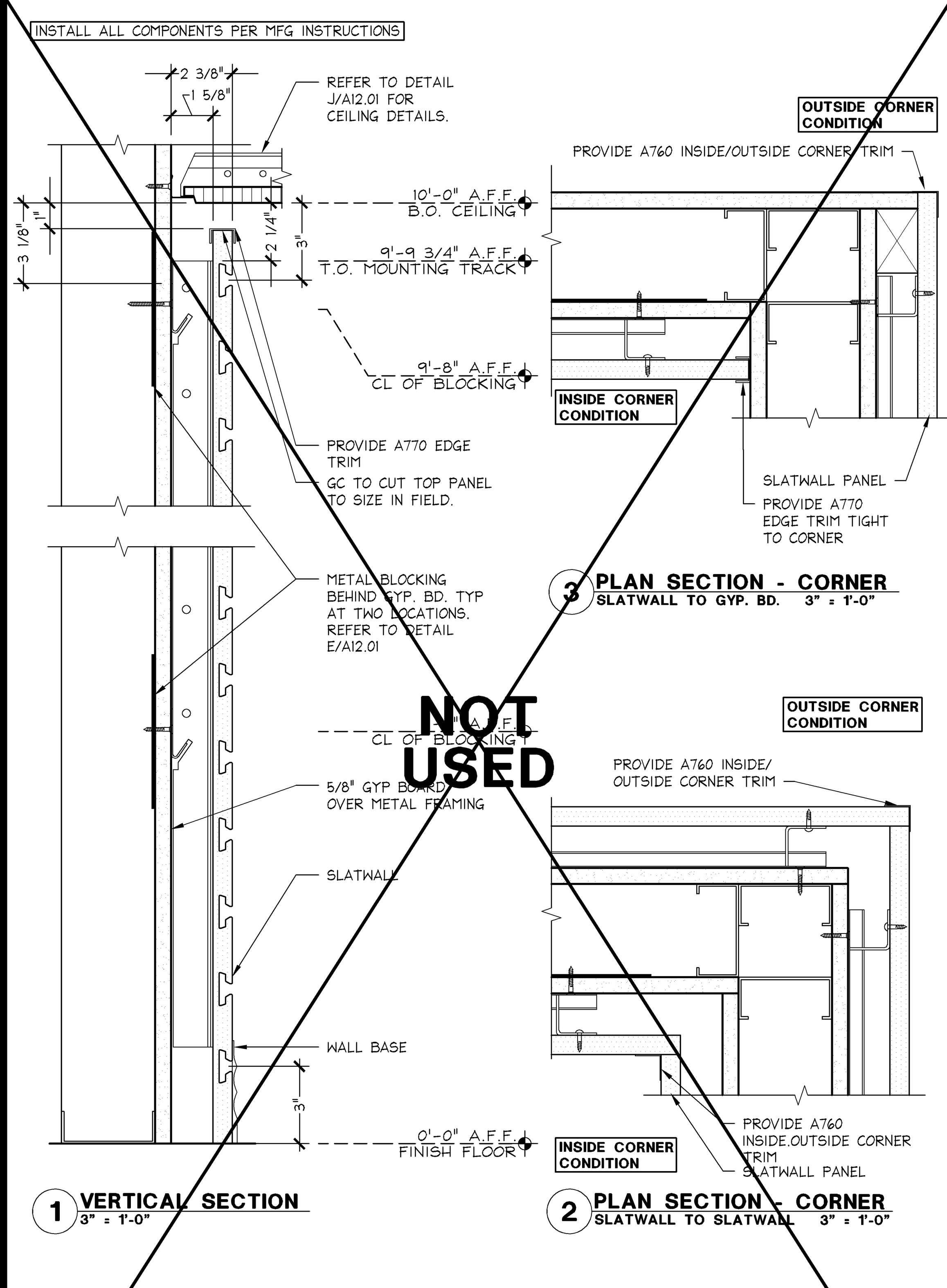

REFER TO STRUCTURAL DRAWINGS FOR STUD GAUGE AND CONNECTION REQUIREMENTS

BREAK ROOM SLAT WALL DETAIL | 3" = 1'-0" | 05D-A1402-N00-DETL | N | 05.09.14

ELEVATION SHOWN IS FOR REFERENCE ONLY. ACTUAL LAYOUT MAY VARY. REFER TO PLAN ON SHEET A13.02 FOR ACTUAL CONFIGURATION.

INSTALL ALL CABINETRY PER MANUFACTURER'S INSTRUCTIONS.

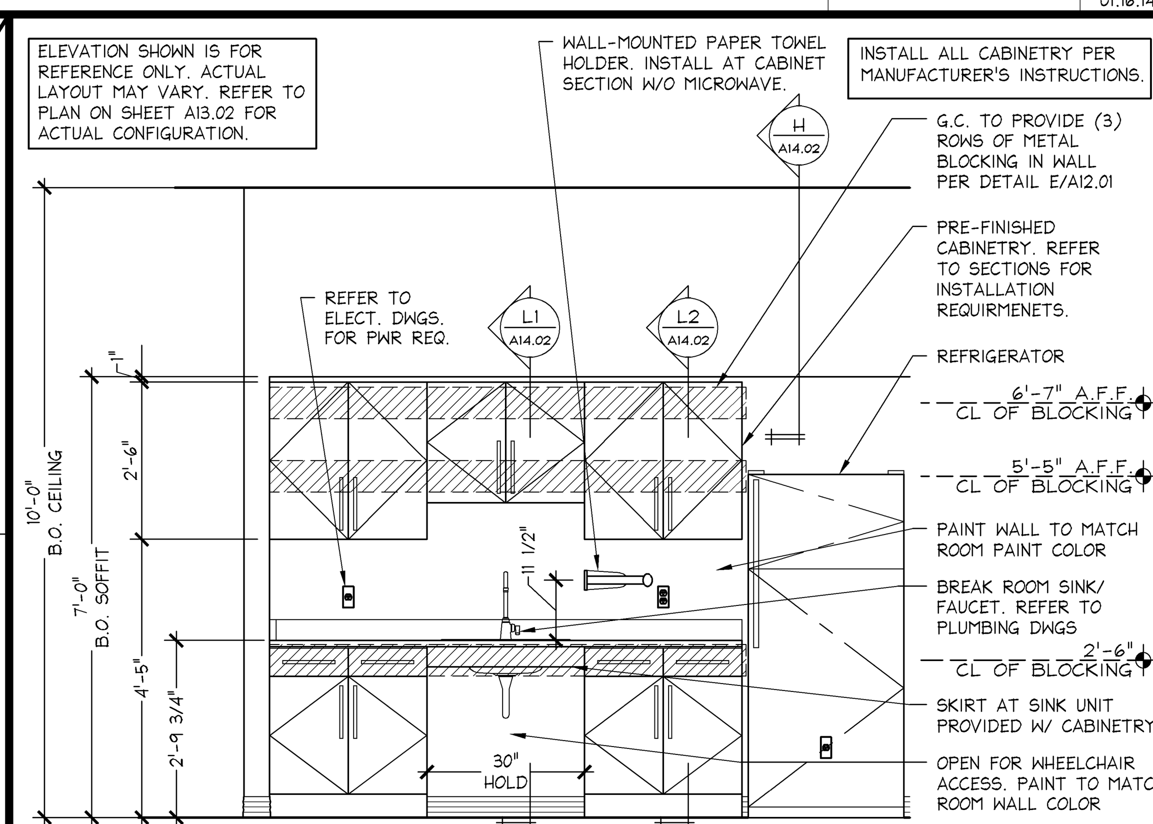

BREAK ROOM CABINETRY | 1/2" = 1'-0" | 05D-A1402-K00-DETL | K | 02.21.14

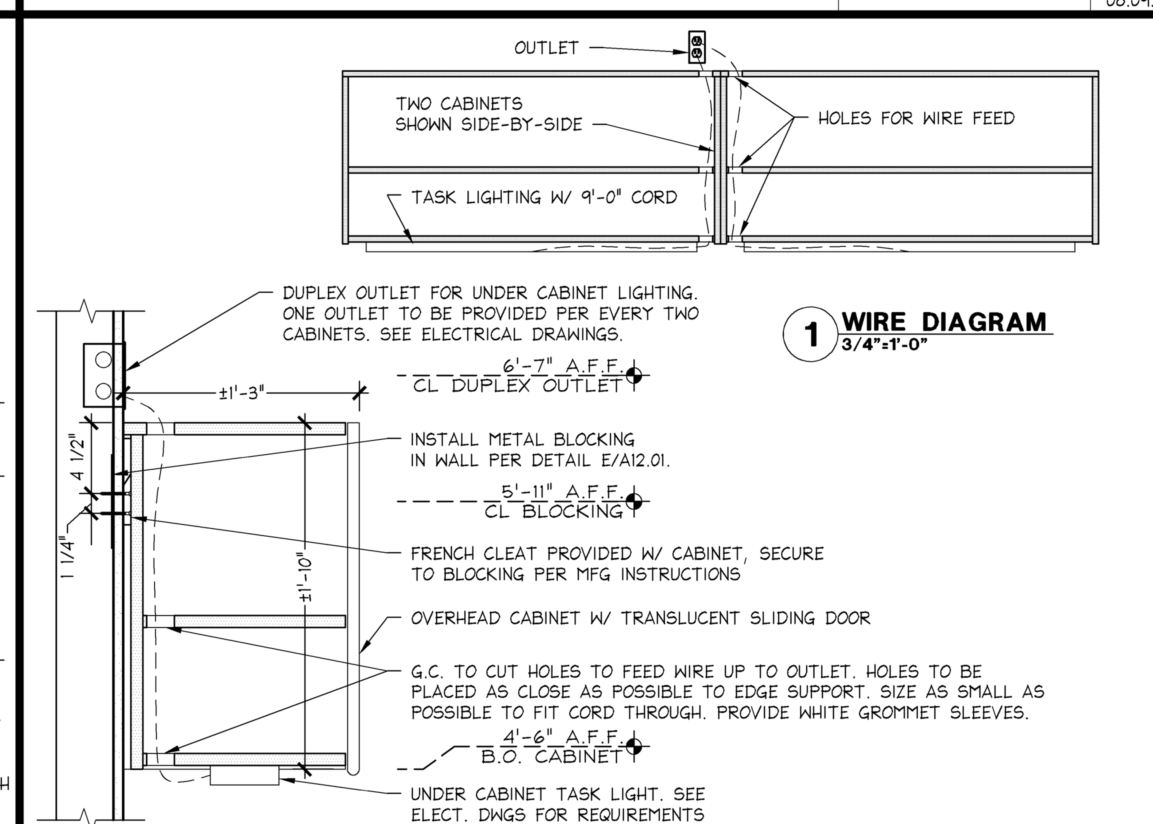

OFFICE OVERHEAD CABINET | 1 1/2" = 1'-0" | 05D-A1402-F00-DETL | F | 09.09.13

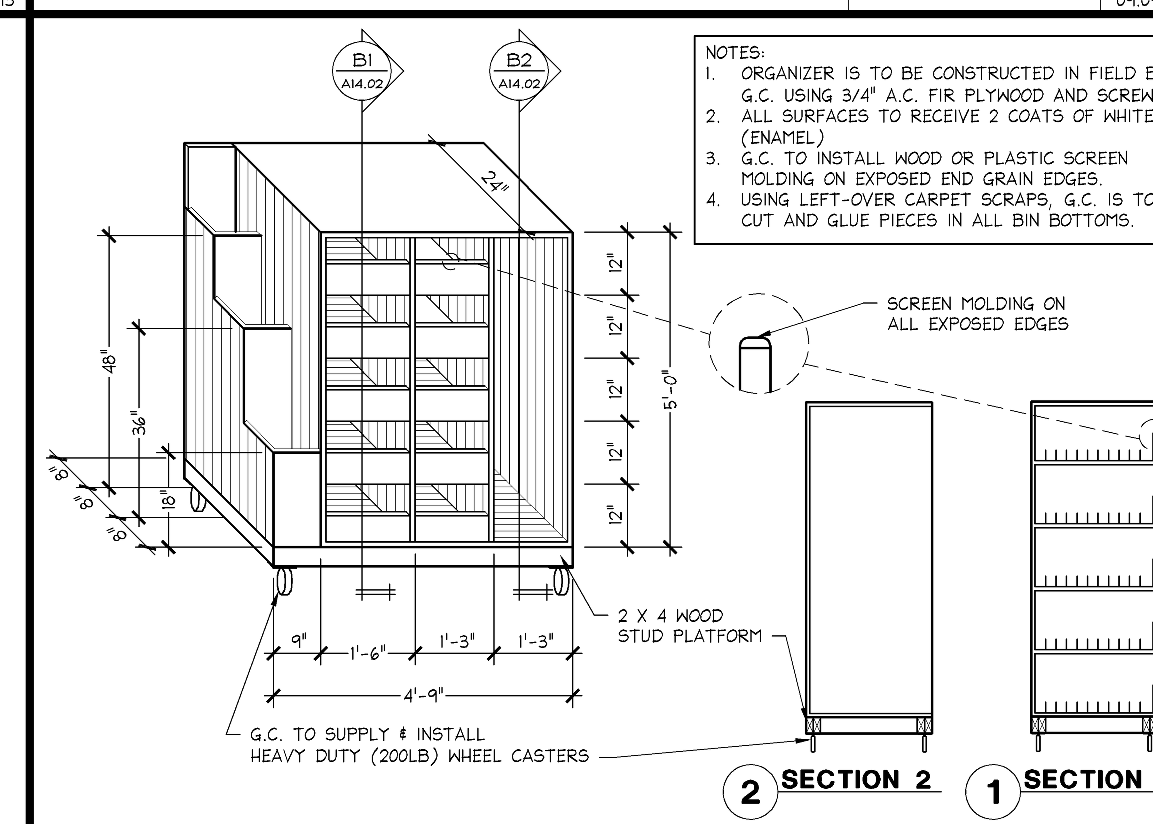

NOTES:
1. ORGANIZER IS TO BE CONSTRUCTED IN FIELD BY G.C. USING 3/4" A.C. FIR PLYWOOD AND SCREWS.
2. ALL SURFACES TO RECEIVE 2 COATS OF WHITE (ENAMEL)
3. G.C. TO INSTALL WOOD OR PLASTIC SCREEN MOLDING ON EXPOSED END GRAIN EDGES.
4. USING LEFT-OVER CARPET SCRAPS, G.C. IS TO CUT AND GLUE PIECES IN ALL BIN BOTTOMS.

HARDWARE STORAGE BIN | 1/2" = 1'-0" | 05D-A1402-B00-DETL | B | 09.09.13

RIGID COUNTERTOP BRACKETS.
#BRA-BRACE-27-W (WHITE)
GROMMET COVER:
#CAP-WH (WHITE)
OUTWATER HARDWARE CORPORATION
800.631.2443

OR LSD&C PM APPROVED EQUAL.

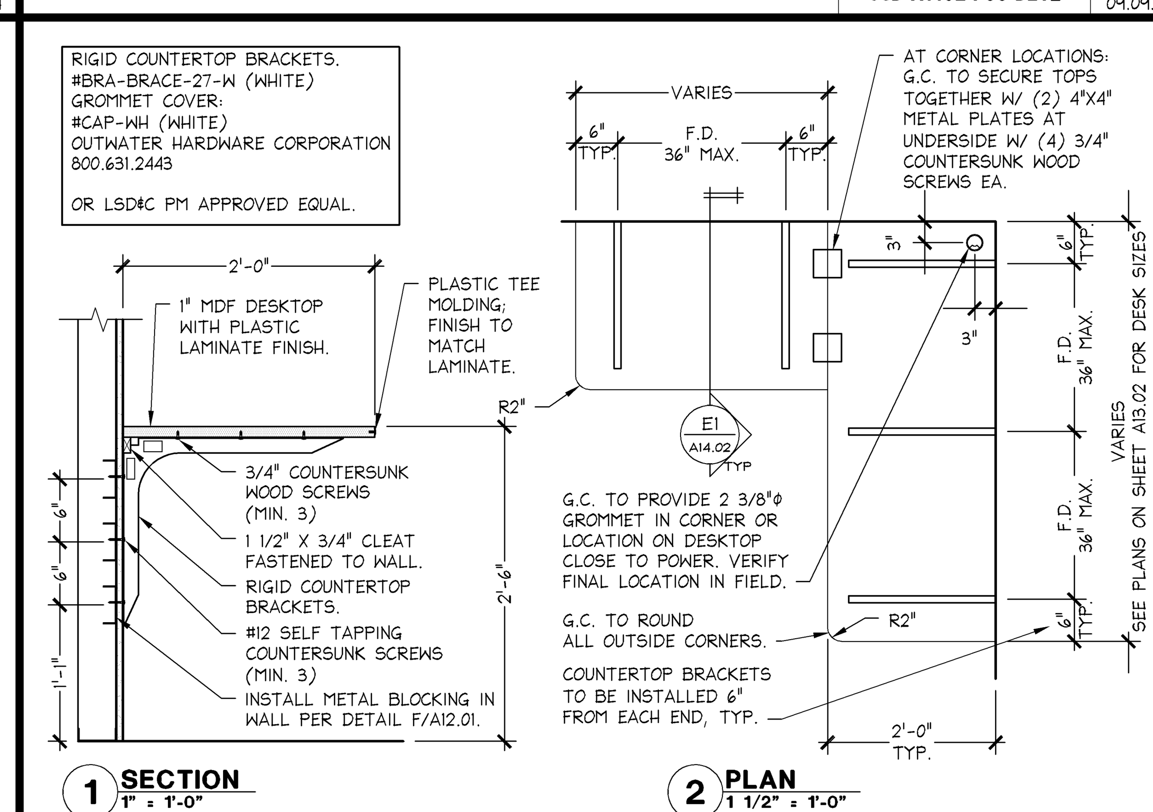

DESK MOUNTING DETAIL | VARIES | 05D-A1402-E00-DETL | E | 05.09.14

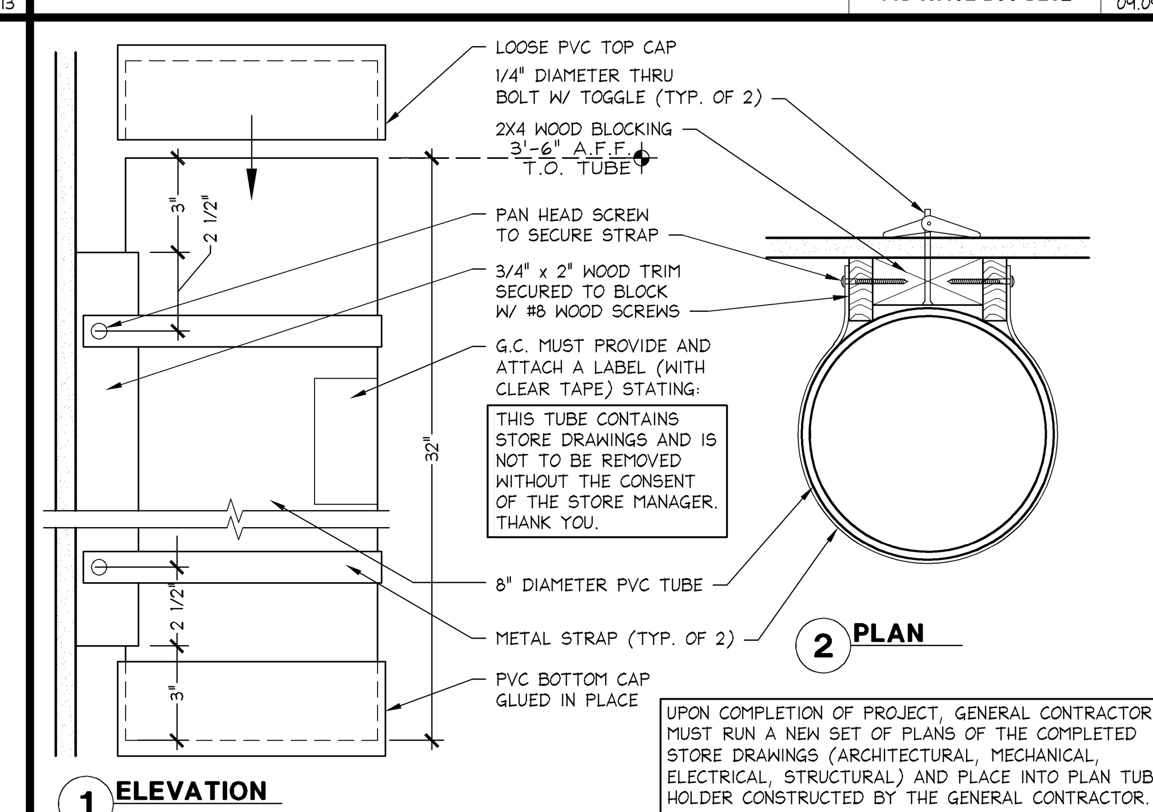

UPON COMPLETION OF PROJECT, GENERAL CONTRACTOR MUST RUN A NEW SET OF PLANS OF THE COMPLETED STORE DRAWINGS (ARCHITECTURAL, MECHANICAL, ELECTRICAL, STRUCTURAL) AND PLACE INTO PLAN TUBE HOLDER CONSTRUCTED BY THE GENERAL CONTRACTOR.

PLAN TUBE HOLDER | 3" = 1'-0" | 05D-A1402-A00-DETL | A | 09.09.13

Stantec
Stantec Architecture Inc.
1383 N. McDowell Blvd., Suite 250
Petaluma, CA U.S.A. 94954
Tel. 707.765.1660 Fax. 707.765.9908
www.stantec.com

GARY M. SEMLING REGISTERED ARCHITECT 12151 NORTH CAROLINA PETALUMA, CA 9-26-14

Limitedbrands
LIMITED STORE PLANNING, INC.
d/b/a STORE DESIGN & CONSTRUCTION
Three Limited Parkway · Columbus, Ohio 43230
Telephone: 614.415.7000 · Fax: 614.415.7349

PROHIBITION ON REUSE:
THESE DRAWINGS AND SPECIFICATIONS WERE PREPARED FOR USE ON A SPECIFIC SITE CONTEMPORANEOUSLY WITH THEIR ISSUE DATE. THEY ARE NOT INTENDED FOR USE ON A DIFFERENT PROJECT SITE OR AT A LATER TIME. REUSE OF THESE DRAWINGS AND SPECIFICATIONS, OR ANY REPRODUCTION THEREOF, ON ANOTHER PROJECT IS PROHIBITED AND CONTRARY TO LAW UNLESS EXPRESSLY AUTHORIZED IN WRITING BY LIMITED STORE PLANNING, INC., D/B/A LIMITED STORE DESIGN AND CONSTRUCTION ("LSDC").

THESE DRAWINGS AND SPECIFICATIONS ARE THE PROPERTY OF LSDC AND SHALL NOT BE DISPLAYED IN ANY MANNER OR USED ON ANY OTHER PROJECT EXCEPT BY WRITTEN AGREEMENT WITH LSDC. NO REPRODUCTION OF THESE DRAWINGS AND SPECIFICATIONS SHALL BE MADE WITHOUT THE WRITTEN AUTHORIZATION OF THE LSDC. ALL ORIGINALS OR REPRODUCTIONS OF THESE DRAWINGS AND SPECIFICATIONS MUST BE RETURNED TO LSDC UPON COMPLETION OF THEIR INTENDED USE, UNLESS OTHERWISE AGREED BY THE LSDC.

COPYRIGHT NOTICE:
THESE DRAWINGS AND SPECIFICATIONS ARE COPYRIGHTED AND SUBJECT TO COPYRIGHT PROTECTION AS AN "ARCHITECTURAL WORK" UNDER SEC. 102 OF THE COPYRIGHT ACT, 17 U.S.C. AS AMENDED DECEMBER 1990; KNOWN AS THE ARCHITECTURAL WORKS COPYRIGHT PROTECTION ACT OF 1990. THE PROTECTION INCLUDES, WITHOUT LIMITATION, THE OVERALL FORM, ARRANGEMENT AND COMPOSITION OF SPACES, AND ELEMENTS OF THE DESIGN. UNDER SUCH PROTECTION, UNAUTHORIZED USE OF THESE DRAWINGS AND SPECIFICATIONS MAY RESULT IN CESSATION OF CONSTRUCTION, BUILDING SEIZURE, AND/OR MONETARY LIABILITY.

010500485

PROJECT INFORMATION:
VICTORIA'S SECRET
CAROLINA PLACE
11025 CAROLINA PLACE PKWY
SPACE B-14
PINEVILLE, NC 28134

SCOPE: REFRESH | PACKAGE: PKG II
DESIGN TYPE: NMA/ANGELS | GENERATION: R131Sa/142Fa
LSD&C PROJECT #: 00059286 | A/E PROJECT #: 2007684009

REVISIONS:
REQUIRED BY: DATE

ELITE CONSTRUCTION GROUP
~~LAKE JACKSON, TX~~
PHONE: 979-285-0712
~~NOTE: THESE PRINTS HAVE BEEN~~
REDUCED BY 50 PERCENT. SCALE
~~WILL BE 50 PERCENT OF WHAT IS~~
NOTED ON PLANS

DATE ISSUED: 9/26/14
DESIGNED BY: KW
DRAWN BY: MS
CHECKED BY: DB

NON-SALES/ AMENITY DETAILS

DRAWING NUMBER:
A14.2